Product name

Internal extractor with segmented grasp edge

For extracting bearings, bearing outer rings and bushings that lay flat on one another.

Art. No.	21-6-E
Series	21-E
EAN	4021176924088

Technical attribute	Metric	Imperial
Ball bearing ISO	6010; 6210; 6310; 6410; 16010; 61810; 61910; 6011; 6211; 6311; 6411; 16011; 61811; 61911; 6012; 6212; 6312; 6412; 16012; 61812; 61912	6010; 6210; 6310; 6410; 16010; 61810; 61910; 6011; 6211; 6311; 6411; 16011; 61811; 61911; 6012; 6212; 6312; 6412; 16012; 61812; 61912
Inner diameter of ball bearing	48 - 63 mm	1 7/8 - 2 1/2 inch
Effective depth	80 mm	3 3/16 inch
Length of internal extractor	120 mm	4 3/4 inch
Number of segments	6	6
Spanner size of the internal extractor	32 mm	
Weight	0.71 kg	

has to be accomplished with

Slide hammer device

22-0-1

Counterstay

22-2

Goes with

Art. No.	Product name
22-2	Counterstay

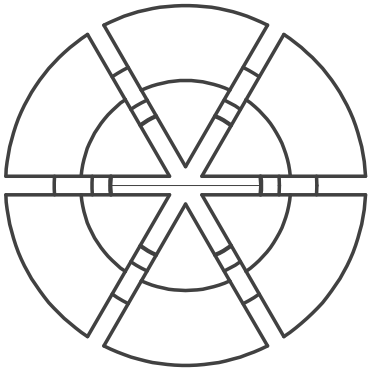

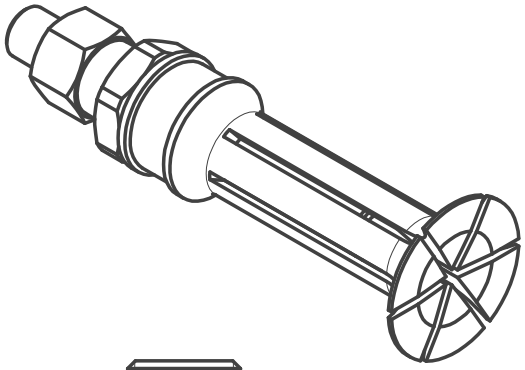

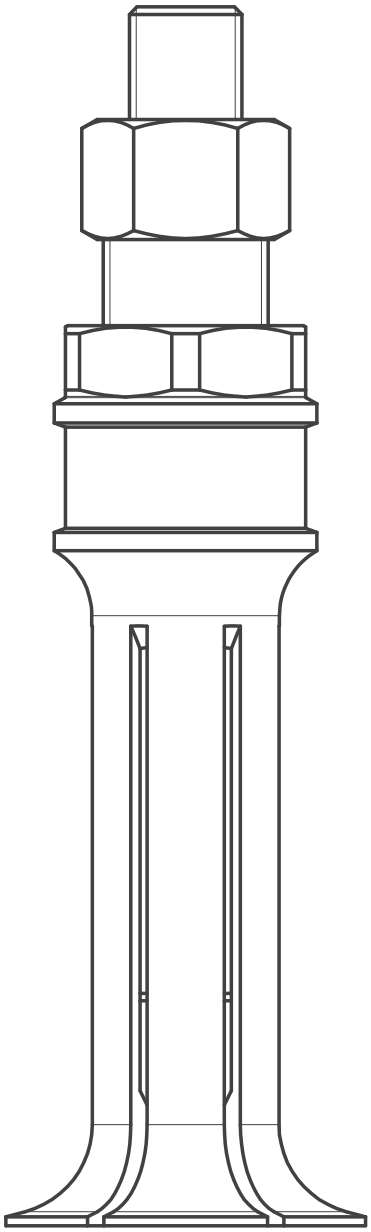

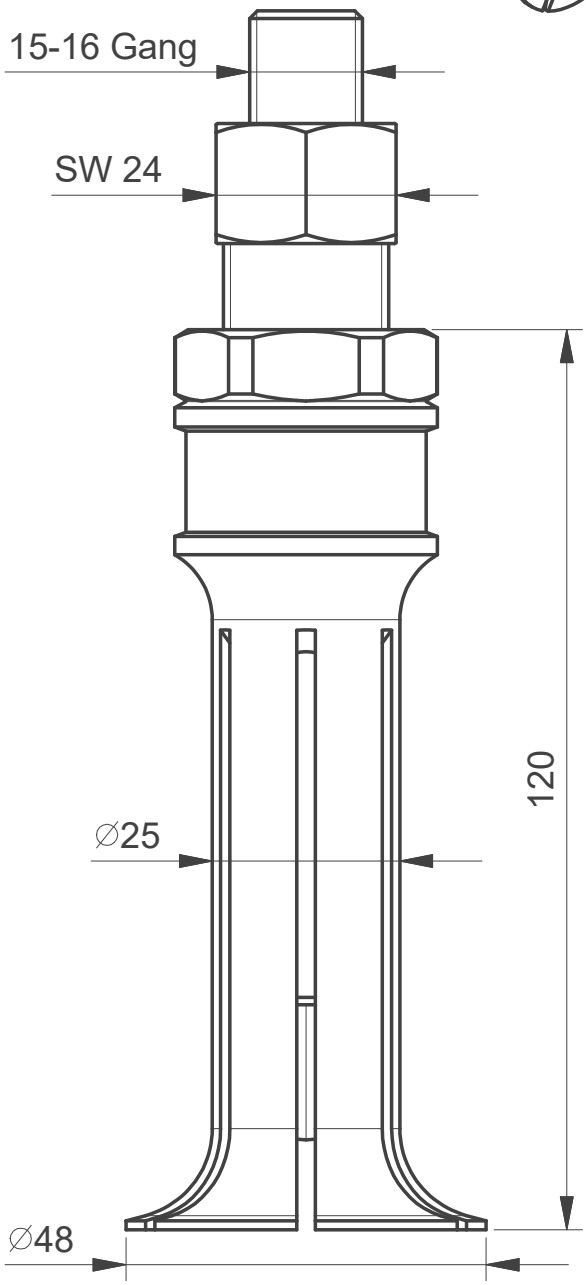

Kleinbongartz & Kaiser oHG Werkzeugfabrik Hilden - Germany	Dokumentname: 21-6-E_Segment-Innenauszieher		Toleranz: DIN ISO 2768-m
	Dokumentbeschreibung: Baugruppe		Material: Hochfester extra zäher Vergütungsstahl/ High tensile strength and toughness steel
	Erstellt von: Breidenbach	Erstellungsdatum: 09/02/2017	Maßstab: 1:1

Teilbeschreibung: Segment-Innenauszieher/ Internal extractor with segmented grasp edge	Wärmebehandlung / Härte: vergüteter Stahl/ tempered steel Oberfächenbehandlung:

Artikelnummer / ZNR.: 21-6-E	Dokumentversion: -		Schutzvermerk ISO 16016 beachten	